System Considerations for Hardware Parameters in a 60 GHz WLAN

Jonas Noreus[1], Maxime Flament[2], Arne Alping[1],and Herbert Zirath[3]

[1]*Microwave and High Speed Electronics Research Center, Ericsson Microwave Systems, SE-431 84 Mölndal, Sweden*
[2]*Dept. of Signals and Systems, Chalmers University of Technology, SE-412 96 Göteborg, Sweden*
[3]*Dept. of Microelectronics, Chalmers University of Technology, SE-412 96 Göteborg, Sweden*
jonas.noreus@emw.ericsson.se, maxime.flament@s2.chalmers.se, arne.alping@emw.ericsson.se, zirath@ep.chalmers.se

ABSTRACT

In the framework of HFE (High-Frequency Electronics) programme, funded by SSF (Foundation for Strategic Research), an activity on microelectronics for millimeter wave applications has started. As a result from this work, a broadband wireless 60 GHz transceiver demonstrator for WLAN:s (Wireless Local Area Network) will be developed. It is therefore important to identify the relevant technical limitations. Intermediate goals are to set up a possible 60 GHz wireless communication model and to study the influence of electronic MMIC (Monolithic Microwave Integrated Circuit) characteristics on the system performance. In this paper, we analyze a possible set-up to modulate and demodulate digital signals via a given analog front-end transceiver.

We focus on a point-to-point link for the simulations. Hardware circuits were designed using a commercial 0.15 μm GaAs pHEMT technology. All circuit characteristics used in simulations were provided by Chalmers University of Technology.

System limitations due to existing circuits in a 60 GHz WLAN using DQPSK/OFDM (Differential Quadrature Phase Shift Keying / Orthogonal Frequency Division Multiplexing) modulation are presented along with the hardware parameters of the existing circuits. The discussion makes a clear link between digital modulation and the front-end transceiver design for required system performance in a 60 GHz WLAN.

1. INTRODUCTION

During the past few years, the interest for the unlicensed 60 GHz band for wireless communication applications has dramatically increased. One reason is the need for increasingly higher data rates [1]. Also, this band – roughly between 59 and 64 GHz – has the property of being the atmospheric oxygen absorption band. In an outdoor environment this means that signals are strongly attenuated; about 15 dB/km in addition to the free space loss. In indoor applications 60 GHz signals are also severely attenuated by inner walls and human bodies. These properties, and the fact that radiated output power is limited to some tens of mW, lead to a good frequency reuse factor.

At present, indoor point-to-multipoint communication with a multiple access technique appears to be one of the most interesting applications for commercial use. In a simulation set-up, this can be described by a point-to-point model including a multipath channel for the propagation.

Performances of wireless communication systems are strongly correlated with hardware specifications. Hardware parameters of interest are amplifier linearity, output power, noise figure, oscillator phase noise, and mixer conversion loss. System parameters are BER (Bit Error Rate), radio channel characteristics, signal bandwidth and switching time for transceiver in case of TDD (Time Division Duplex).

Our emphasis is to investigate the system performance with respect to the characteristics of the mm-wave MMIC:s. In particular, we investigate BER performance for different PA (Power Amplifier) output power, different PA linearity requirements, different LNA (Low Noise Amplifier) noise figures and different VCO (Voltage Controlled Oscillator) phase noise deviations.

2. ARCHITECTURE

2.1. General model

Figure 1 shows a general communication scheme. The coding/decoding and modulation/demodulation are performed in the digital part of the transceiver. The transceiver performs up-/down-conversion to/from the 60 GHz frequency band. Each block has a non-linear transfer function, hence not easy to express in a mathematical way. The multipath channel (air propagation) is a time dispersive flat fading radio channel. The resulting transfer function is the convolution of $h_t(t)$, $h_c(t)$, and $h_r(t)$. However, in an OFDM system we like to express the total transfer function in the frequency domain, since the data is encoded in the frequency domain, see Eq. (1).

$$H_{total}(f) = H_t(f) \cdot H_c(f) \cdot H_r(f) \qquad (1)$$

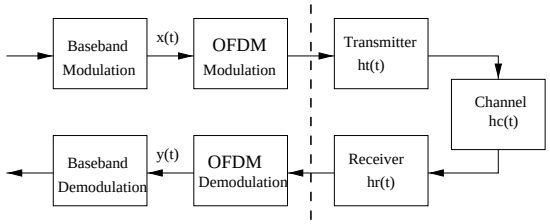

Figure 1: General communication model.

2.2. Front-end transceiver and circuit properties

Table 1 presents the different hardware circuits for the RF parts that have been designed and fabricated at the Department of Microelectronics at Chalmers University of Technology. The circuits are designed in a 0.15 µm GaAs pHEMT technology [2].

Table 1. GaAs pHEMT circuit characteristics

Circuit	Gain [dB]	Noise figure [dB]	Output power [dBm][1]	Phase Noise [dBc@ 100kHz][2]	Conv. Loss [dB]
LNA, 60 GHz	6	5	12	-	-
IF Amplifier, 5GHz [3]	3	2.7	17	-	-
Power Amplifier, 60GHz	6	5	12	-	-
Mixer	-7	7	-	-	7
VCO, 7GHz	-	7	-	-80	-
Freq. multiplier [3]	-	-	-	-	-

[1] At *1dB compression point.*
[2]*This unit is dB relative to carrier, at a frequency separation of 100 kHz.*

Figure 2 shows the front-end structure of a transceiver as it would appear if assembled with the available circuits, and *Figure 3* shows the front-end architecture for both communication ends including the multipath channel for propagation.

The frequency multipliers introduce harmonics of the VCO central frequency, about 30 dB below the VCO central frequency power. However, the mixer works as a switch and the harmonics are therefore not propagated through the mixer.

On the other hand, the VCO phase noise propagates through the multipliers. The phase noise is spread by a factor $(4\cdot 2)^2$, thus the phase noise level at the input of the mixer will be at least $10\log[(4\cdot 2)^2]=18$ dB higher than the VCO phase noise level.

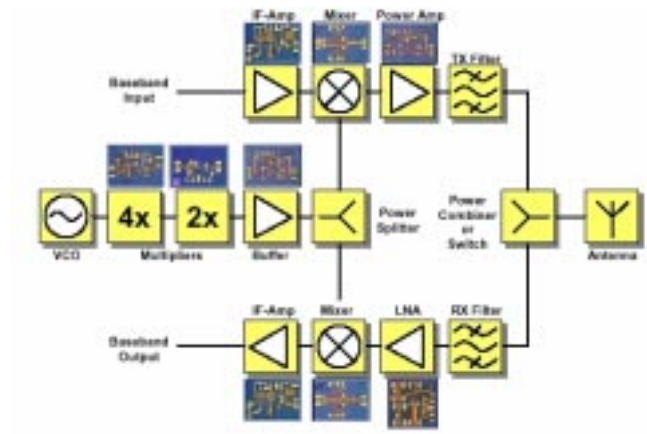

Figure 2: Front-end transceiver structure and presently available micro-electronics circuits [4] for the RF parts in one communication end of the WLAN.

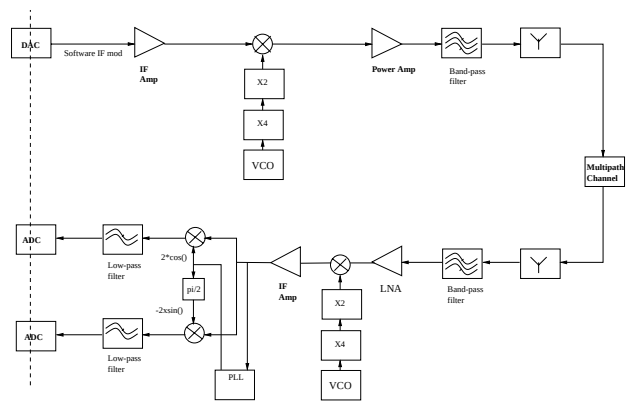

Figure 3: Front-end architecture of the WLAN system.

2.3. DQPSK/OFDM Modulation

The bit stream is baseband modulated into a DQPSK signal x(t) (*Figure 1*). The signal is then fed blockwise into an Inverse FFT to design the OFDM pulses. Thus, OFDM pulses contain a group of signals x(t), modulated in the frequency domain and transferred to the time domain using an Inverse FFT. This means that each of the signals in a block are included in one single OFDM pulse, and characterized by a unique sub-channel frequency. That is, each of the x(t) is carried by an independent sub-channel.

To reduce ISI (InterSymbol Interference), a cyclic prefix can be added to the OFDM pulses. The cyclic prefix can also be used for pulse synchronization, which is an important issue for the demodulation procedure. With a cyclic pattern in each OFDM pulse to be demodulated, the resulting signal y(t) is given by

$$y(t) = x(t) \cdot H_{total}(f) \qquad (2)$$

2.4. Error control coding

To improve performance, redundancy can be added using error control coding. Most error control coding schemes use the diversity in time and frequency to provide efficient error correction capabilities. Time diversity coding implies usage of interleaving between OFDM pulses. However, the coherence time of the channel at 60 GHz is relatively long, this means that the interleaving between OFDM pulses will require high-capacity buffers and therefore introduce latency. On the other hand, diversity in frequency is an interesting property to exploit to its maximum. Indeed, the channel has a coherence bandwidth of approximately 8 to 10 MHz. This coherence bandwidth is a limit between flat fading channels and frequency selective channels. Whilst flat fading channels show the best results, the sub-channel bandwidth should not exceed 10 MHz.

2.5. Differential encoding

In the described DQPSK/OFDM demodulation, we prefer frequency differential encoding because the bandwidth of a sub-channel is much smaller than the coherence bandwidth previously described. Hence, we expect that two neighboring sub-channels experience the same disturbance through the wireless channel, and use the phase reference of the first signal to demodulate the second, and so on.

2.6. Channel

The channel at 60 GHz has a strong multipath behavior. Typical RMS delay spread in office room is 18 to 20 ns and excess delay spread for 30 dB attenuation is 70 ns [5].

The Saleh-Valenzuela channel model, based on a double Poisson process, is adapted to describe statistically the time of arrival and the complex values that describe the E-vector states of the rays after multi-path propagation, i.e. reflection and fading [6]. The rays have independent uniformly distributed phases and are assumed to arrive in clusters. They also have independent Rayleigh distributed amplitudes whose variances decay exponentially with cluster and ray delay. The clusters and the rays within a cluster form Poisson arrival processes that have different but fixed rates [7]. Depending on the type of antenna, the power delay profiles have different properties. As the direction of arrival of the rays is correlated with the cluster, the rate of cluster arrival drops dramatically when the antenna gains increase.

Channel multipath problems are usually solved by the use of an equalizer or by increasing the symbol time. OFDM uses FFT to obtain a signal constellation of high dimension, thus increasing the symbol time. A cyclic prefix can be utilized to make a simple equalizer in the frequency domain.

3. SIMULATION RESULTS

The 60 GHz WLAN was simulated with a DQPSK/OFDM signal (200 MHz bandwidth), following the architecture described in *Figure 3*, and given the circuit characteristics from *Table 1*. A cyclic prefix of 20 baseband symbols was implemented, but neither error control coding nor equalizer was applied. Raw BER performances were obtained, as function of signal compression (peak clipping), VCO phase noise and SNR (Signal to Noise Ratio).

Input signal compression yields clipped envelope peaks which corresponds to non-linear amplification. The consequence is higher BER. *Figure 4* shows that -5.5 dB of clipped peaks may be accepted for BER=10^{-3}. Since the envelope has a peak/average ratio of 10 dB or less, a PA back off of 4.5 dB would be sufficient for error free transmission (BER<10^{-3}).

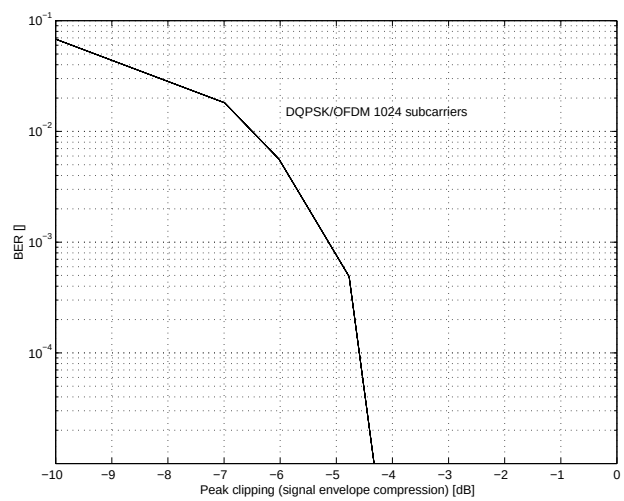

Figure 4. BER versus signal compression.

Figure 5 shows the BER as function of VCO phase noise. Phase noise can be described as a spectrum broadening with a Gaussian shape. In the available VCO circuit, the spectrum level is -80 dBc @ 100 kHz, i.e. at 100 kHz separation from the carrier. At the mixer input after the multipliers, this phase noise level is spread to -62 dBc @ 100 kHz. At this level, BER=$5\cdot10^{-2}$. An improvement of the VCO phase noise to -94 dBc @ 100 kHz or better is required for obtaining error free transmission (BER<10^{-3}).

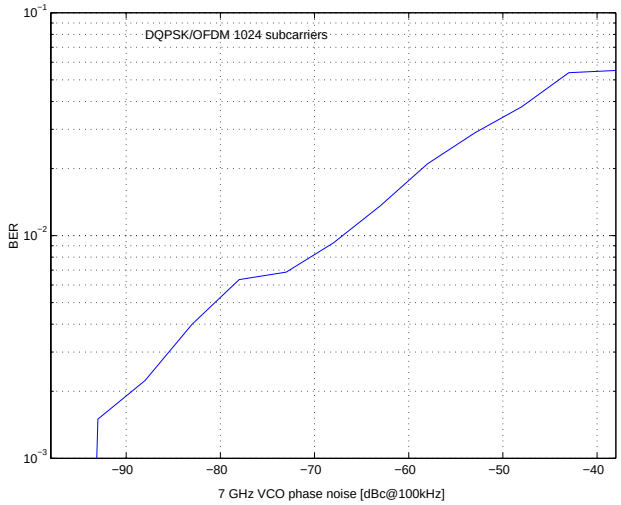

Figure 5. BER versus 7 GHz VCO phase noise. The phase noise at mixer input is 18 dB higher.

Figure 6 shows the BER as function of SNR. The LNA noise level and/or the transmitted output power are variables in SNR. The available circuit PA output power, after 5 dB back off due to the peak/average ratio, is 7 dBm (5 mW). The available circuit LNA noise factor is 5 dB. An SNR=30 dB is required for a BER=10^{-3}. In a link budget calculation we assumed a base antenna gain of 5 dBi (isotropic) and a terminal antenna gain of 20 dBi (directed). With path loss, the allowed distance between transmitter and receiver would be 10 m.

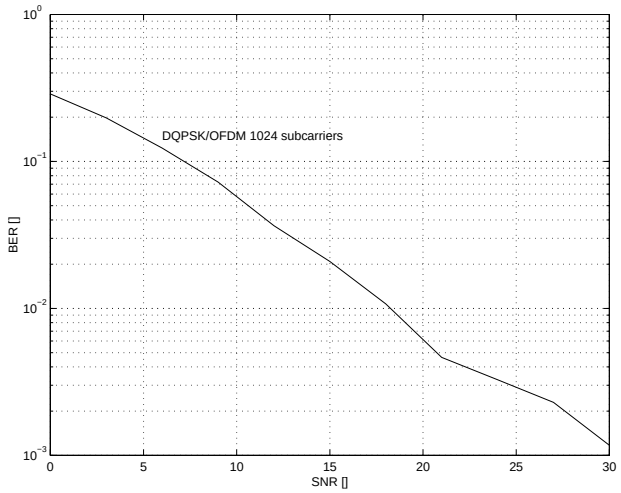

Figure 6. BER versus SNR.

4. CONCLUSIONS

A BER of 10^{-3} and better is feasible with the available MMIC:s. In a hardware implementation, further improvement of BER can also be made with the use of error control coding and simple equalization with coherent baseband modulation.

A signal envelope peak compression of -5.5 dB can be accepted in a DQPSK/OFDM modulated signal.

Phase noise must be improved in the available VCO circuit, from -80 dBc @ 100 kHz to at least -94 dBc @ 100 kHz.

If the SNR could be improved with 3 dB, the maximum distance in the link budget would increase from 10 m to 14 m. This corresponds to a required PA output power of 10 dBm (10 mW). An improved LNA noise figure from 5 dB to 4 dB would give 11 m as the maximum distance.

ACKNOWLEDGMENTS

This work has been done in collaboration with the 4GW project within the PCC (Personal Computing and Communication) research programme, funded by SSF.

The authors wish to thank M.Sc. students Arnaud Labouebe and Yann de Gouville at Chalmers University of Technology for the survey they made prior to this work.

REFERENCES

[1] L.M. Correia, R. Prasad, "An Overview of Wireless Broadband Communication", IEEE Communication Mag., Jan. 1997, pp. 28-33.

[2] The 0.15µm GaAS pHEMT process D01PH from Philips PML.

[3] H. Zirath et al., To be presented at the IEEE/MTT-S Int. Microwave Symp., Boston, June 2000, and GHz2000 Symposium, Goteborg, March 2000.

[4] A. Alping, "60GHz Wireless - Applications and Research Activities", To be presented at GHz2000 Symposium, Goteborg, March 2000.

[5] J. Hübner, S. Zeisberg, K. Koora, A. finger, “Channel model for 60 GHz indoor wireless LAN Design Based on Complex Wideband Measurements”, IEEE 47th Vehicular Techn. Conference, 1997, pp. 1004-1008.

[6] J.-H. Park, Y. Kim, Y.-S. Hur, K. Lim, K.-H. Kim, "Analysis of 60 GHz band indoor wireless channels with channel configurations", IEEE Int. Symp. on Personal, Indoor and Mobile Radio Communications, 1998. pp. 617-620.

[7] A. Saleh; R. Valenzuela, "A statistical model for indoor multipath propagation", IEEE Journal on Selected Areas in Communications, Feb. 1987.