Lecture 22:

Factor Graphs

March 29, 2006

Factor Graph Models

- A factor graph model represents the joint distribution as a product of factors over subsets of the variables. Graphically this is indicated by introducing one square node for each factor and connecting it to all elements of the subset it acts over.
- As an example, consider the complete undirected graph on three nodes. In general all we can say from the graph is that the distribution is proportional to some clique potential $\psi(x_1, x_2, x_3)$.

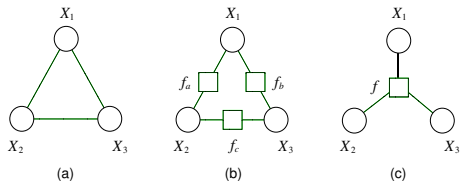

- The middle factor graph specifies the particular factorization: $p(x_1, x_2, x_3) = f_a(x_1, x_2) f_b(x_2, x_3), f_c(x_3, x_1)$

Explicit Factorization

- In both directed and undirected models, the focus was on characterizing joint distributions by specifying conditional independence relations present in those distributions using missing edges in the underlying graph.
- Another way to characterize distributions is to specify their algebraic *factorization*. *Factor Graphs* are an alternative graphical representation of families of joint distributions which do exactly this.
- Factorization and conditional independence are not exactly the same. CI implies a partial factorization, but there may be factorizations that do no imply any CI statements.

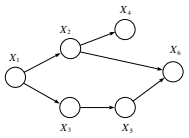

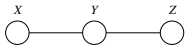

Factor Graphs

- The only edges in a factor graph are between factor nodes and variable nodes; thus these two sets of nodes form a bipartite graph.
- The subsets over which the factors operate need not be cliques of the original graph nor do they need to be disjoint. In fact, the same subset can be repeated more than once.
- As an example, the graph below specifies the factorization $p(x_1, x_2, x_3, x_4, x_5) = f_a(x_1, x_3) f_b(x_3, x_4) f_c(x_2, x_4, x_5) f_d(x_1, x_3)$

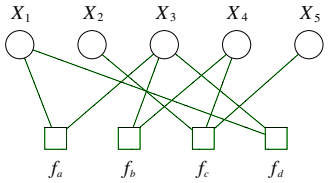

- All directed and undirected models can be trivially converted into factor graphs by introducing a factor for each parent-conditional distribution or each clique potential.

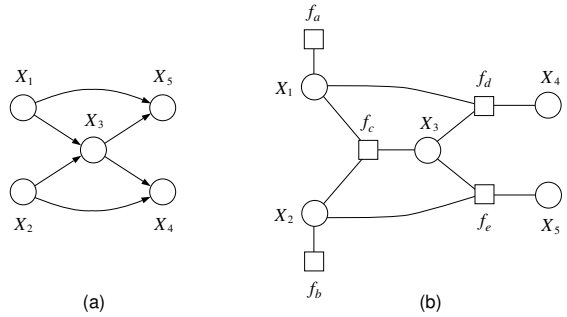
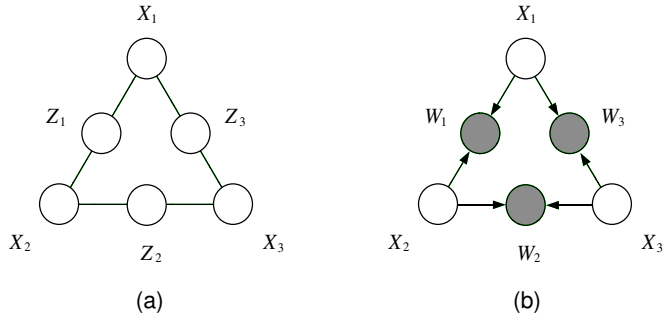
- Also, by introducing (possibly very many) extra random variable nodes, all factor graphs can be represented as either directed or undirected models as well.