Problem Set 7

Assigned: July 8
Due: July 15

Problem 1

A. Trace the execution of Prim's algorithm in finding the minimum spannning tree for the graph below. Show the sequence in which edges are added to the tree, and the successive values of the array $D[v]$.

B. Trace the execution of Kruskal's algorithm in finding the minimum spanning tree for the graph below. Show the sequence in which edges are added to the tree.

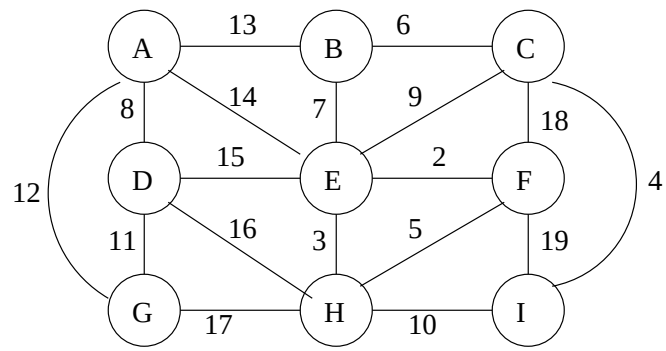

Problem 2

(Siegel, Ex. 8.24) Let G be an undirected weighted graph and let F be a subgraph of G that is a forest (a collection of separate trees). Design an efficient algorithm to find a spanning tree of G that contains F and has the minimal total cost over all spanning trees containing F.

Problem 3

Let G be an undirected graph and let X be a subset of the vertices of G. A *connecting* tree on X is a tree composed out of the edges of G that contains all the vertices in X. One way to compute a connecting tree consists of two steps: (1) Compute a minimum spanning tree T over G. (2) Delete all the edges out of T not needed to connect vertices in X.

A. Give an algorithm to carry out step 2 above above in time $\theta(N)$ where N is the number of vertices in G.

B. The *Steiner tree* for X is the minimum cost connecting tree. Give an example to show that the above algorithm does not always return the Steiner tree.